Inventflow: Grundfos A-partner

Grundfos TPE 100-480/2 SC-A-F-A-BQQE-RX1

Find the pump here:
https://inventflow.nl/en/pompenfilter/tpe/grundfos-tpe-100-480-2-sc-a-f-a-bqqe-rx1

Contact

info@inventflow.nl
+31 (0) 546 45 80 72

Datasheet

Qty.	Description
1	**TPE 100-480/2 SC-A-F-A-BQQE-RX1**

Note! Product picture may differ from actual product

Product No.: 99474586

Single-stage, close-coupled, volute pump with in-line suction and discharge ports of identical diameter.
The pump is of the top-pull-out design, i.e.
the power head (motor, pump head and impeller) can be removed for maintenance or service while the pump housing remains in the pipework.
The pump is fitted with an unbalanced rubber bellows seal.
The shaft seal is according to EN 12756.
Flange standard: Pipework connection is via PN 16 DIN flanges (EN 1092-2 and ISO 7005-2).
The pump is fitted with a fan-cooled asynchronous motor.
The pump includes a frequency converter and PI controller.
This enables continuously variable control of the motor speed, which again enables adaptation of the performance to a given requirement.
The pump is fitted with a differential-pressure sensor.

Controls:

VFD product number:	99448799
Frequency converter:	Built-in
Type of frequency converter:	CUE 3X380-500V IP55 RUG 30KW
Appr. for VFD:	CE, CULUS, C-TICK

Liquid:

Pumped liquid:	Water
Liquid temperature range:	-25 .. 120 °C
Selected liquid temperature:	20 °C
Density:	998.2 kg/m³

Technical:

Pump speed on which pump data are based:	2950 rpm
Rated flow:	156 m³/h
Rated head:	49.4 m
Actual impeller diameter:	200 mm
Code for shaft seal:	BQQE
Curve tolerance:	ISO9906:2012 3B

Materials:

Pump housing:	Cast iron EN-GJL-250 ASTM class 35
Impeller:	Cast iron EN-GJL-200

Qty.	Description	
		ASTM class 30
	Installation:	
	Range of ambient temperature:	-20 .. 55 °C
	Maximum operating pressure:	16 bar
	Max pressure at stated temp:	16 bar / 120 °C
	Type of connection:	DIN
	Size of connection:	DN 100
	Pressure rating for connection:	PN 16
	Port-to-port length:	550 mm
	Flange size for motor:	FF350
	Electrical data:	
	Motor type:	SIEMENS
	IE Efficiency class:	IE3
	Rated power - P2:	30 kW
	Mains frequency:	50 Hz
	Rated voltage:	3 x 380-420D/660-725Y V
	Rated current:	56,0-51,0/32,0-29,5 A
	Starting current:	660-660 %
	Cos phi - power factor:	0.86
	Rated speed:	2955 rpm
	Efficiency:	IE3 93,3%
	Motor efficiency at full load:	93.3-93.3 %
	Motor efficiency at 3/4 load:	93.6-93.6 %
	Motor efficiency at 1/2 load:	93.4-93.4 %
	Number of poles:	2
	Enclosure class (IEC 34-5):	IP55
	Insulation class (IEC 85):	F
	Motor No:	99454131
	Others:	
	Minimum efficiency index, MEI ≥:	0.65
	Net weight:	388 kg
	Gross weight:	531 kg
	Shipping volume:	1.28 m³
	Country of origin:	HU
	Custom tariff no.:	84137051

99474586 TPE 100-480/2 SC-A-F-A-BQQE-RX1 50 Hz

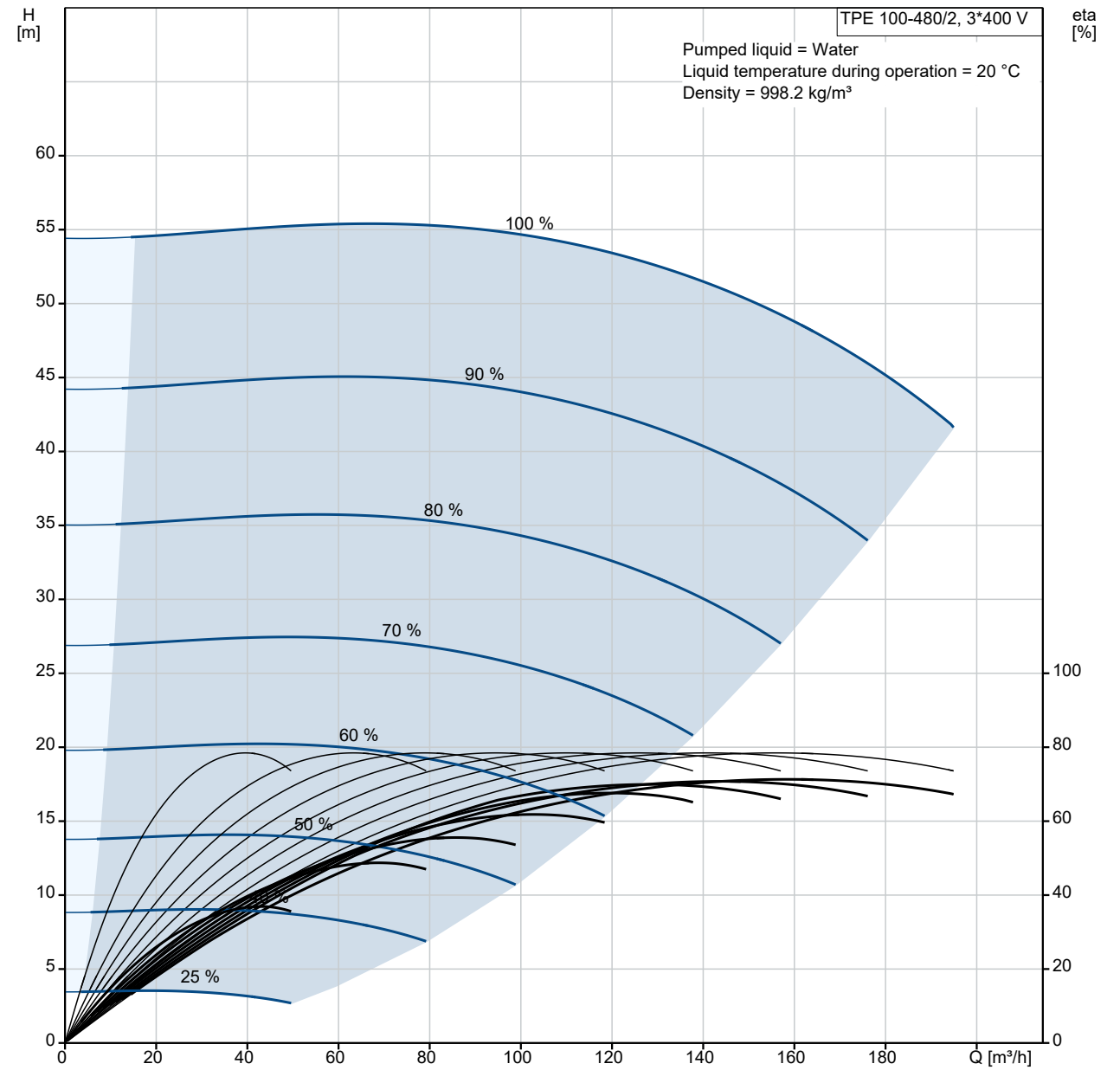

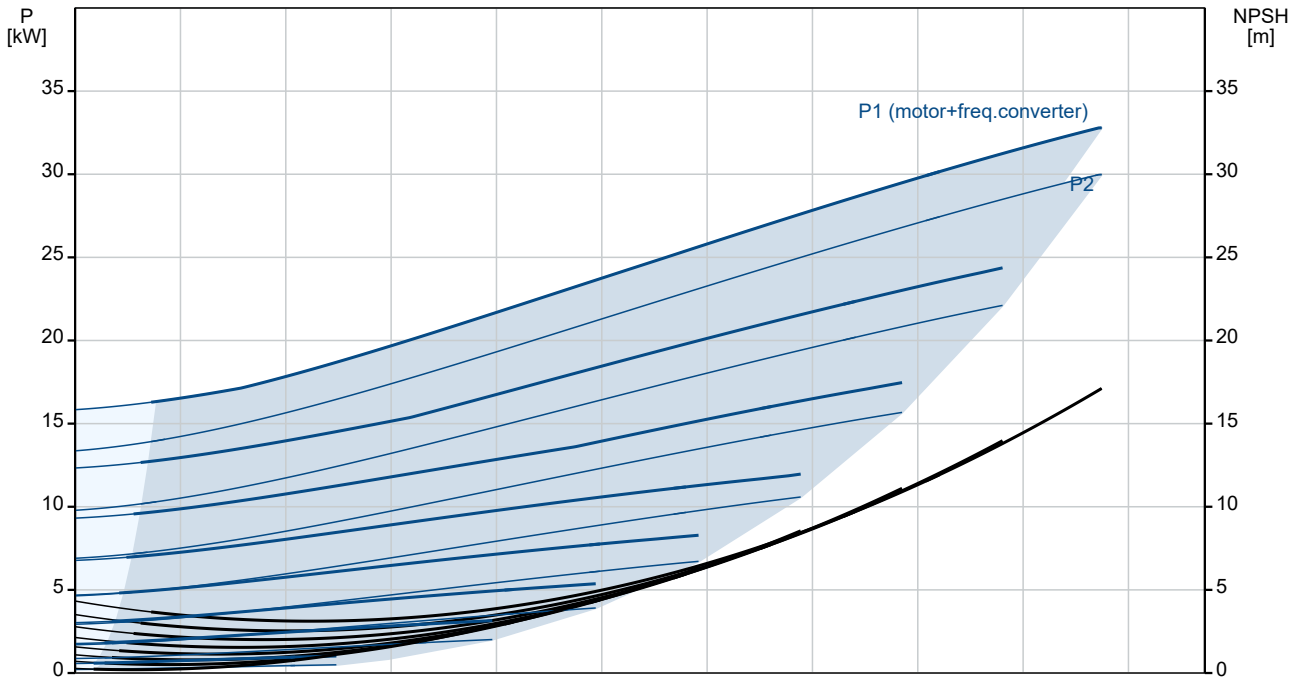

Description	Value
General information:	
Product name:	TPE 100-480/2 SC-A-F-A-BQQE-RX1
Product No:	99474586
EAN number:	5713829711303
Technical:	
Pump speed on which pump data are based:	2950 rpm
Rated flow:	156 m³/h
Rated head:	49.4 m
Maximum head:	480 dm
Actual impeller diameter:	200 mm
Code for shaft seal:	BQQE
Curve tolerance:	ISO9906:2012 3B
Pump version:	A
Materials:	
Pump housing:	Cast iron
Pump housing:	EN-GJL-250
Pump housing:	ASTM class 35
Impeller:	Cast iron
Impeller:	EN-GJL-200
Impeller:	ASTM class 30
Material code:	A
Installation:	
Range of ambient temperature:	-20 .. 55 °C
Maximum operating pressure:	16 bar
Max pressure at stated temp:	16 bar / 120 °C
Type of connection:	DIN
Size of connection:	DN 100
Pressure rating for connection:	PN 16
Port-to-port length:	550 mm
Flange size for motor:	FF350
Connect code:	F
Liquid:	
Pumped liquid:	Water
Liquid temperature range:	-25 .. 120 °C
Selected liquid temperature:	20 °C
Density:	998.2 kg/m³
Electrical data:	
Motor type:	SIEMENS
IE Efficiency class:	IE3
Rated power - P2:	30 kW
Mains frequency:	50 Hz
Rated voltage:	3 x 380-420D/660-725Y V
Rated current:	56,0-51,0/32,0-29,5 A
Starting current:	660-660 %
Cos phi - power factor:	0.86
Rated speed:	2955 rpm
Efficiency:	IE3 93,3%
Motor efficiency at full load:	93.3-93.3 %
Motor efficiency at 3/4 load:	93.6-93.6 %
Motor efficiency at 1/2 load:	93.4-93.4 %
Number of poles:	2
Enclosure class (IEC 34-5):	IP55
Insulation class (IEC 85):	F
Motor protec:	PTC
Motor No:	99454131
Controls:	
VFD product number:	99448799
Frequency converter:	Built-in
Type of frequency converter:	CUE 3X380-500V IP55 RUG 30KW
Appr. for VFD:	CE, CULUS, C-TICK
Others:	
Minimum efficiency index, MEI ≥:	0.65

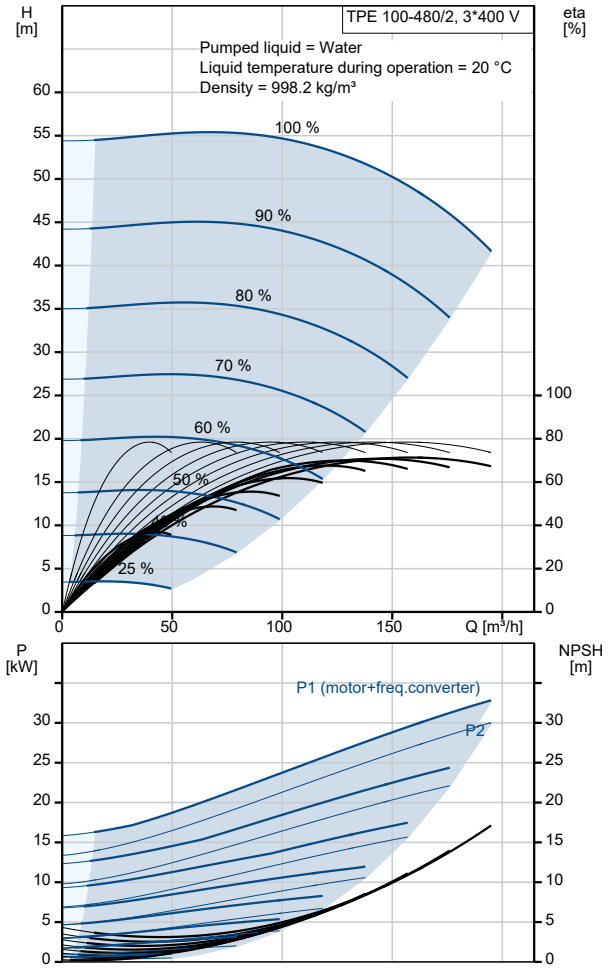

Description	Value
Net weight:	388 kg
Gross weight:	531 kg
Shipping volume:	1.28 m³
Config. file no:	99465282
Country of origin:	HU
Custom tariff no.:	84137051

99474586 TPE 100-480/2 SC-A-F-A-BQQE-RX1 50 Hz

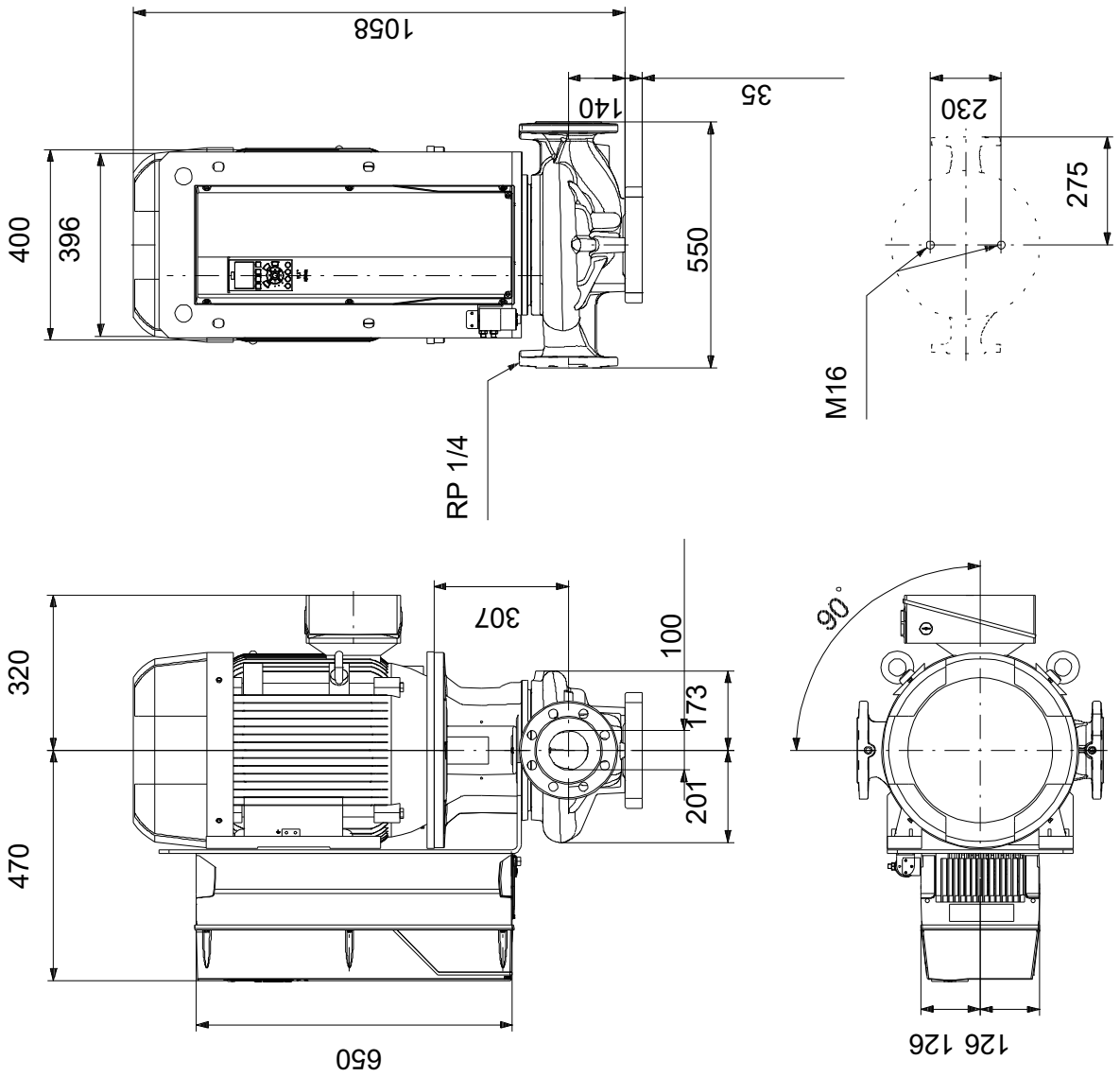

Note! All units are in [mm] unless others are stated.
Disclaimer: This simplified dimensional drawing does not show all details.

Spare parts TPE 100-480/2, Product No. 99474586
Produced After 1339 (production year and week number)

	Pos	Omschrijving	Opmerking tekst	Classificatie Gegevens	Onderdeelnr.	Aantal	Eenheid
-	56	Base plate			96536246	1	pcs
	28g	Hex head cap screw		Length (mm): 30 MM		2	
				Thread: M16			
	56	Base plate				1	
-		Kit, capillary tubes			99184237	1	pcs
	508	Tube				1	
	509	Capillary tube.				1	
-		Kit, sensor			96611527	1	pcs
		Cable tie				5	
		Bracket				1	
	7a	Combi Slot Torx screw				3	
	84c	Disc spring				3	
	268	Pan head screw				1	
	501	Sensor				1	
	505	Bracket		Type: MGE		1	
	506	Socket head cap screw				1	
	508	Tube				1	
	509	Capillary tube.				1	
	510	Mounting bush.				2	
	511	Cable pin				3	
-		Spare, wear ring			99208810	1	pcs
	45	Wear ring				1	
		Control card			99590986	1	pcs
		Control panel			99591437	1	pcs
	4	Fan, internal			96901612	1	pcs
	6	Fan, main			96809605	1	pcs
	5	Power card			96809728	1	pcs
	3	SMPS			96809397	1	pcs
-		Motor				1	pcs
	153	Ball bearing			99423034	1	
	156	Kit, fan			98062265	1	
	151	Kit, fan cover			98062275	1	
	164a	Kit, terminal box			98062262	1	
	18	Plug			96620482	1	pcs
	18	Plug			98164277	1	pcs
	28	Hex head screw		Length (mm): 60	97506949	4	pcs
				Thread: M16			
	36	Hex nut		Thread: M16	96620480	4	pcs
	49	Impeller			98296637	1	pcs
-	50	Pump housing cpl.			99211173	1	pcs
	36	Nut		Thread: M10	96620484	8	
	56	Base plate			99788464	1	pcs
	67	Nut		Thread: M18	92526535	1	pcs
	72.a	O-ring		Diameter: 221,84	92547617	1	pcs
				Material type: EPDM			
				Thickness: 3,53			
	72.a	O-ring		Diameter: 221,84	97511825	1	pcs
				Material type: EPDM			
				Thickness: 3,53			
	72.a	O-ring		Diameter: 221,84	97757671	1	pcs
				Material type: EPDM			
				Thickness: 3,53			
	77a	Pan head screw			99266550	4	pcs
	510	Mounting bush.			99079267	2	pcs