Inventflow: Grundfos A-partner

Grundfos NBE 32-250/219 S2AF2ABQQE

Find the pump here:
https://inventflow.nl/en/pompenfilter/nbe/grundfos-nbe-32-250-219-s2af2abqqe

Contact

info@inventflow.nl
+31 (0) 546 45 80 72

Datasheet

Qty.	Description
1	**NBE 32-250/219 S2AF2ABQQE**

Note! Product picture may differ from actual product

Product No.: 99534351

Non-self priming, single-stage centrifugal
Flange standard: pump according to EN 1092-2.

The pump is for the pumping of thin, clean or slightly contaminated liquids without abrasive or long-fibred solids.

The impeller is hydraulically as well as dynamically balanced.

The pump has the following characteristics:
- flange dimensions according to EN 1092-2,

Pump housing: - Cast iron volute pump housing,
- stainless steel shaft

Impeller: and Cast iron impeller and bronze wear rings,
- unbalanced mechanical shaft seal according to EN 12756.

The pump is fitted with an IEC-flanged three-phase MGE motor with frequency converter and PI-controller integrated in the motor terminal box. No additional motor protection is required, as both motor and electronics are protected by integrated overload and temperature protection.

An external sensor can be connected if controlled pump operation based on for example flow, differential pressure or temperature is required.

A control panel enables setting of required setpoint as well as setting of pump to MIN or MAX operation or to STOP. The control panel has indicator lights for "Operation" and "Fault".

Communication with the pump is possible by means of Grundfos R100 Remote Control enabling further settings as well as reading out of a number of parameters such as "Actual value", "Speed", "Power input" and total "Power consumption".

The terminal box holds terminals for the connection of:
- pump start/stop (potential-free contact),
- external remote setpoint setting via analog signal, 0 - 5 V, 0 - 10 V, 0(4) - 20 mA,
- 5 V voltage supply for setpoint potentiometer, Imax = 5 mA,

Qty.	Description

- sensor, 0 - 5 V, 0 - 10 V, 0(4) - 20 mA,
- 24 V voltage supply for sensor, Imax = 40 mA,
- input for forced control to MIN or MAX (potential-free contact),
- potential-free fault signal relay with changeover contact,
- RS485 GENIbus.

Controls:

Frequency converter:	Built-in
Pressure sensor:	Y

Liquid:

Pumped liquid:	Water
Liquid temperature range:	-25 .. 120 °C
Selected liquid temperature:	20 °C
Density:	998.2 kg/m³

Technical:

Pump speed on which pump data are based:	2901 rpm
Rated flow:	21.51 m³/h
Rated head:	50.14 m
Actual impeller diameter:	219 mm
Nominal impeller diameter:	250
Shaft seal arrangement:	Single
Code for shaft seal:	BQQE
Curve tolerance:	ISO9906:2012 3B2
Bearing design:	Standard

Materials:

Pump housing:	Cast iron EN-GJL-250 ASTM class 35
Wear ring:	Brass
Impeller:	Cast iron EN-GJL-200 ASTM class 30
Shaft:	Stainless steel EN 1.4301 AISI 304
Internal pump house coating:	CED

Installation:

Maximum ambient temperature:	50 °C
Maximum operating pressure:	16 bar
Pipe connection standard:	EN 1092-2
Size of inlet connection:	DN 50
Size of outlet connection:	DN 32
Pressure rating for connection:	PN 16
Bearing lubrication:	Grease
Pump housing with feet:	Yes
Support block:	N

Electrical data:

IE Efficiency class:	IE5
Rated power - P2:	7.5 kW
Mains frequency:	50 Hz
Rated voltage:	3 x 380-500 V
Rated current:	14.1-11.2 A
Cos phi - power factor:	0.93-0.89
Rated speed:	360-4000 rpm
Efficiency:	92.5%
Motor efficiency at full load:	92.5 %
Number of poles:	2
Enclosure class (IEC 34-5):	IP55

Qty.	Description
	Insulation class (IEC 85): F Motor No: 98971272 Type of pressure sensor: Differential Others: Minimum efficiency index, MEI ≥: 0.70 Net weight: 96 kg Gross weight: 113 kg Shipping volume: 0.315 m³ Country of origin: HU Custom tariff no.: 84137051

99534351 NBE 32-250/219 S2AF2ABQQE 50 Hz

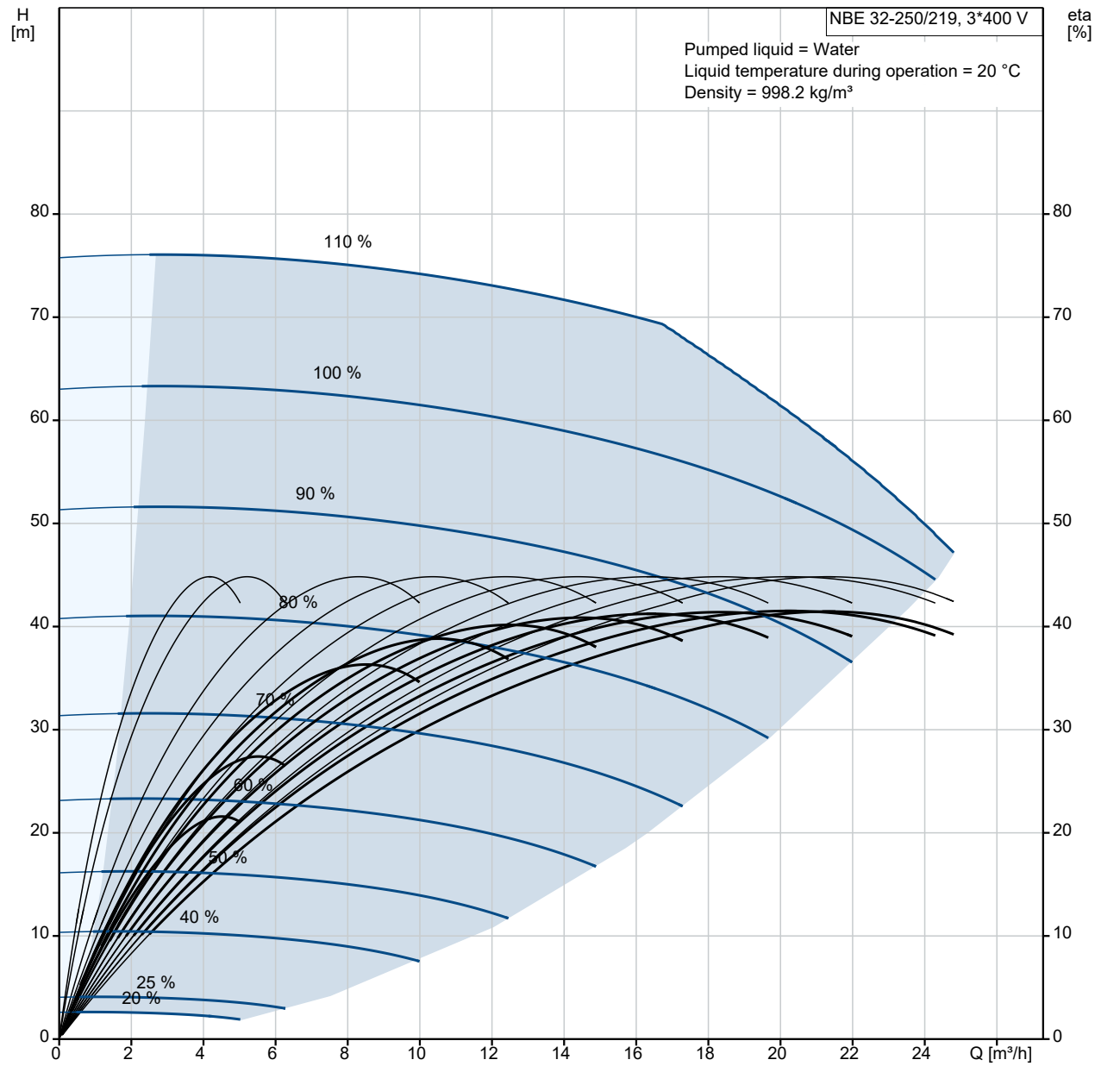

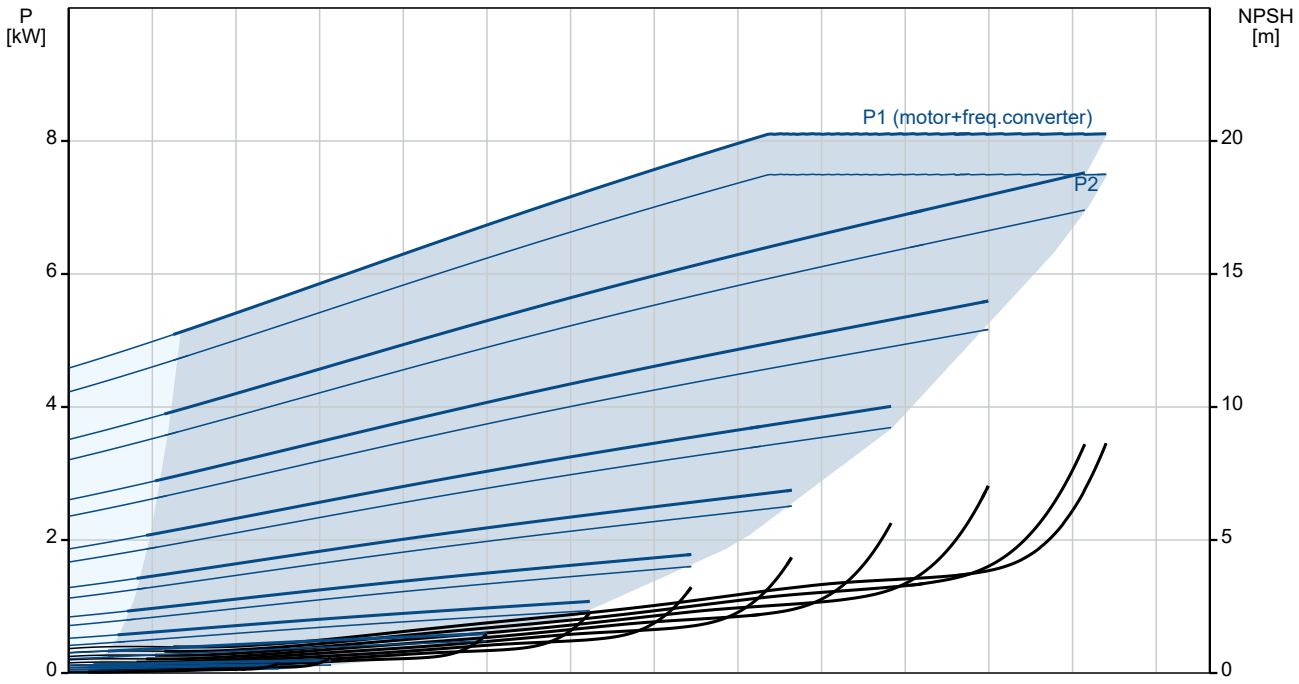

Description	Value
General information:	
Product name:	NBE 32-250/219 S2AF2ABQQE
Product No:	99534351
EAN number:	5713830666418
Technical:	
Pump speed on which pump data are based:	2901 rpm
Rated flow:	21.51 m³/h
Rated head:	50.14 m
Actual impeller diameter:	219 mm
Nominal impeller diameter:	250
Shaft seal arrangement:	Single
Shaft diameter:	24 mm
Code for shaft seal:	BQQE
Curve tolerance:	ISO9906:2012 3B2
Pump version:	A
Bearing design:	Standard
Materials:	
Pump housing:	Cast iron
Pump housing:	EN-GJL-250
Pump housing:	ASTM class 35
Wear ring:	Brass
Impeller:	Cast iron
Impeller:	EN-GJL-200
Impeller:	ASTM class 30
Shaft:	Stainless steel
Shaft:	EN 1.4301
Shaft:	AISI 304
Internal pump house coating:	CED
Material code:	A
Code for rubber:	E
Installation:	
Maximum ambient temperature:	50 °C
Maximum operating pressure:	16 bar
Pipe connection standard:	EN 1092-2
Size of inlet connection:	DN 50
Size of outlet connection:	DN 32
Pressure rating for connection:	PN 16
Bearing lubrication:	Grease
Pump housing with feet:	Yes
Support block:	N
Connect code:	F2
Liquid:	
Pumped liquid:	Water
Liquid temperature range:	-25 .. 120 °C
Selected liquid temperature:	20 °C
Density:	998.2 kg/m³
Electrical data:	
IE Efficiency class:	IE5
Rated power - P2:	7.5 kW
Mains frequency:	50 Hz
Rated voltage:	3 x 380-500 V
Rated current:	14.1-11.2 A
Cos phi - power factor:	0.93-0.89
Rated speed:	360-4000 rpm
Efficiency:	92.5%
Motor efficiency at full load:	92.5 %
Number of poles:	2
Enclosure class (IEC 34-5):	IP55
Insulation class (IEC 85):	F
Motor protec:	ELEC
Motor No:	98971272
Mount. design. acc. IEC 34-7:	IM V1/B5

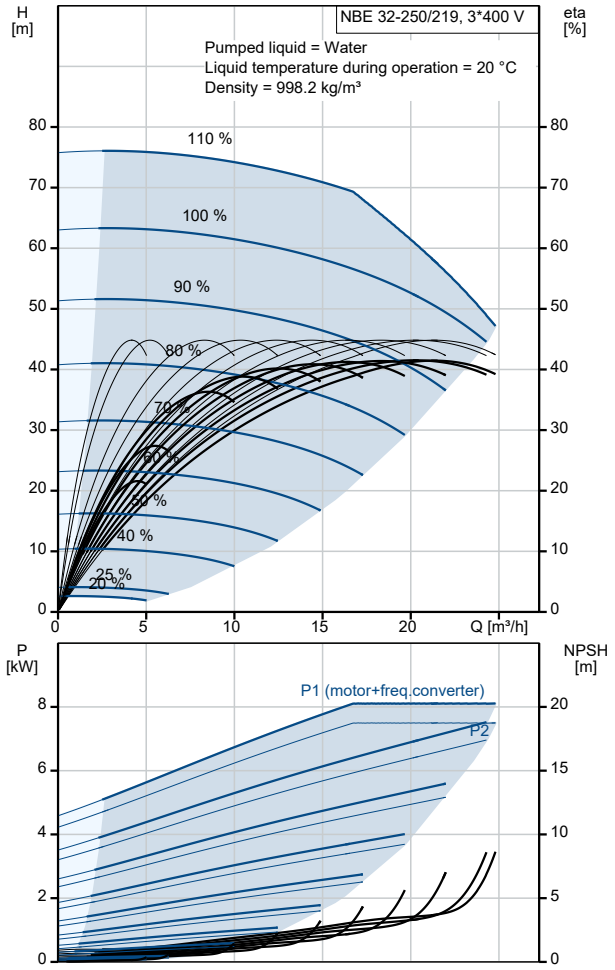

Description	Value
Type of pressure sensor:	Differential
Controls:	
Control panel:	HMI300 - Advanced
Function Module:	FM300 - Advanced
Frequency converter:	Built-in
Pressure sensor:	Y
Others:	
Minimum efficiency index, MEI ≥:	0.70
Net weight:	96 kg
Gross weight:	113 kg
Shipping volume:	0.315 m³
Country of origin:	HU
Custom tariff no.:	84137051

99534351 NBE 32-250/219 S2AF2ABQQE 50 Hz

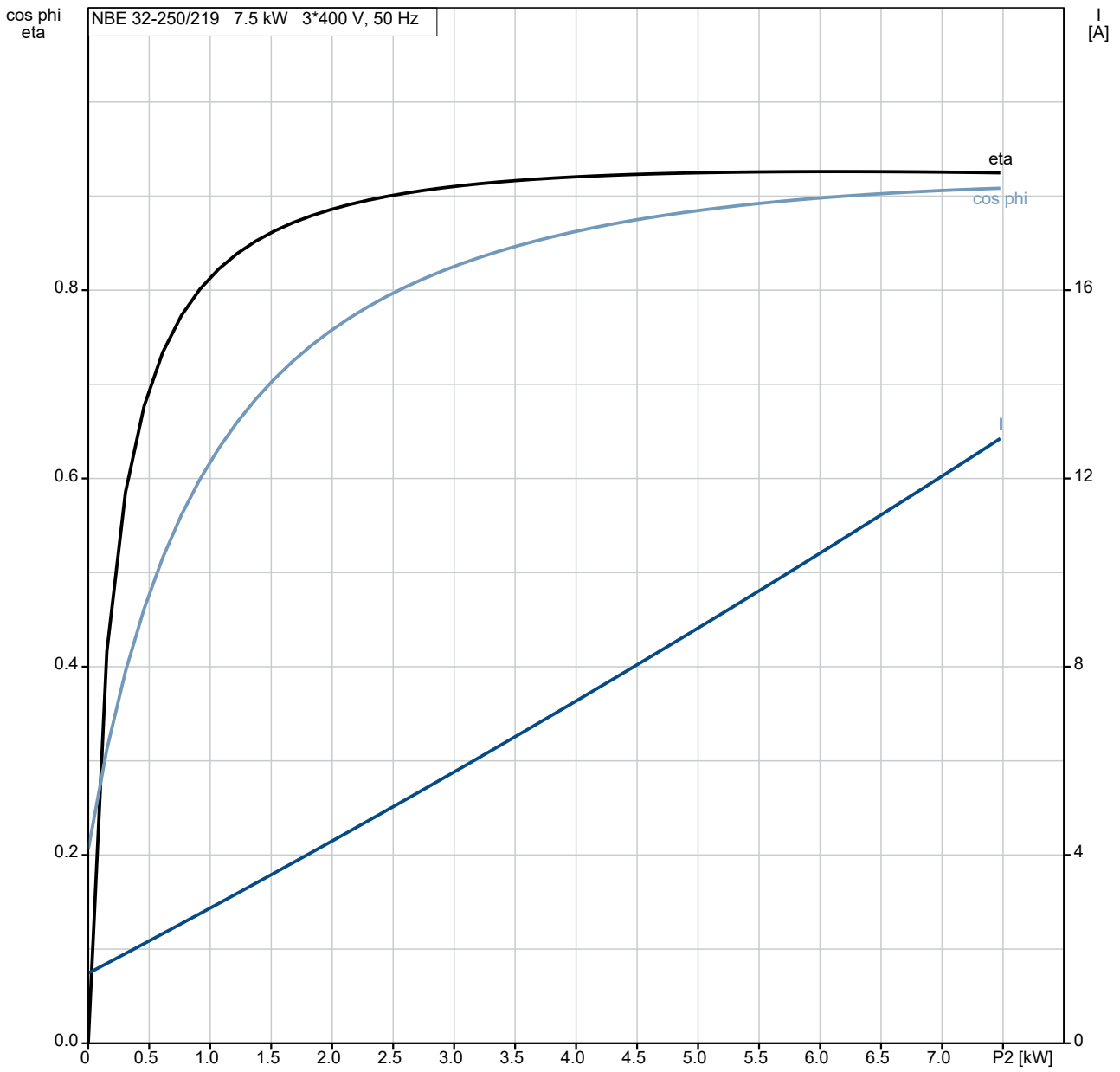

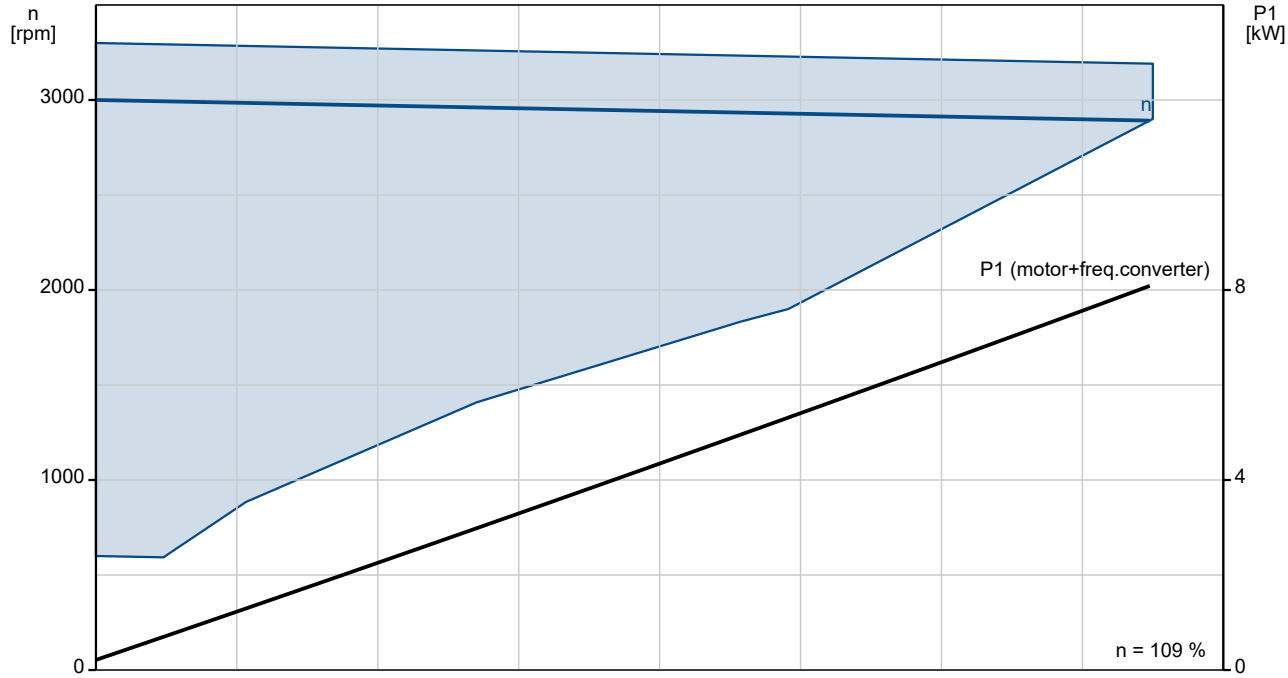

99534351 NBE 32-250/219 S2AF2ABQQE 50 Hz

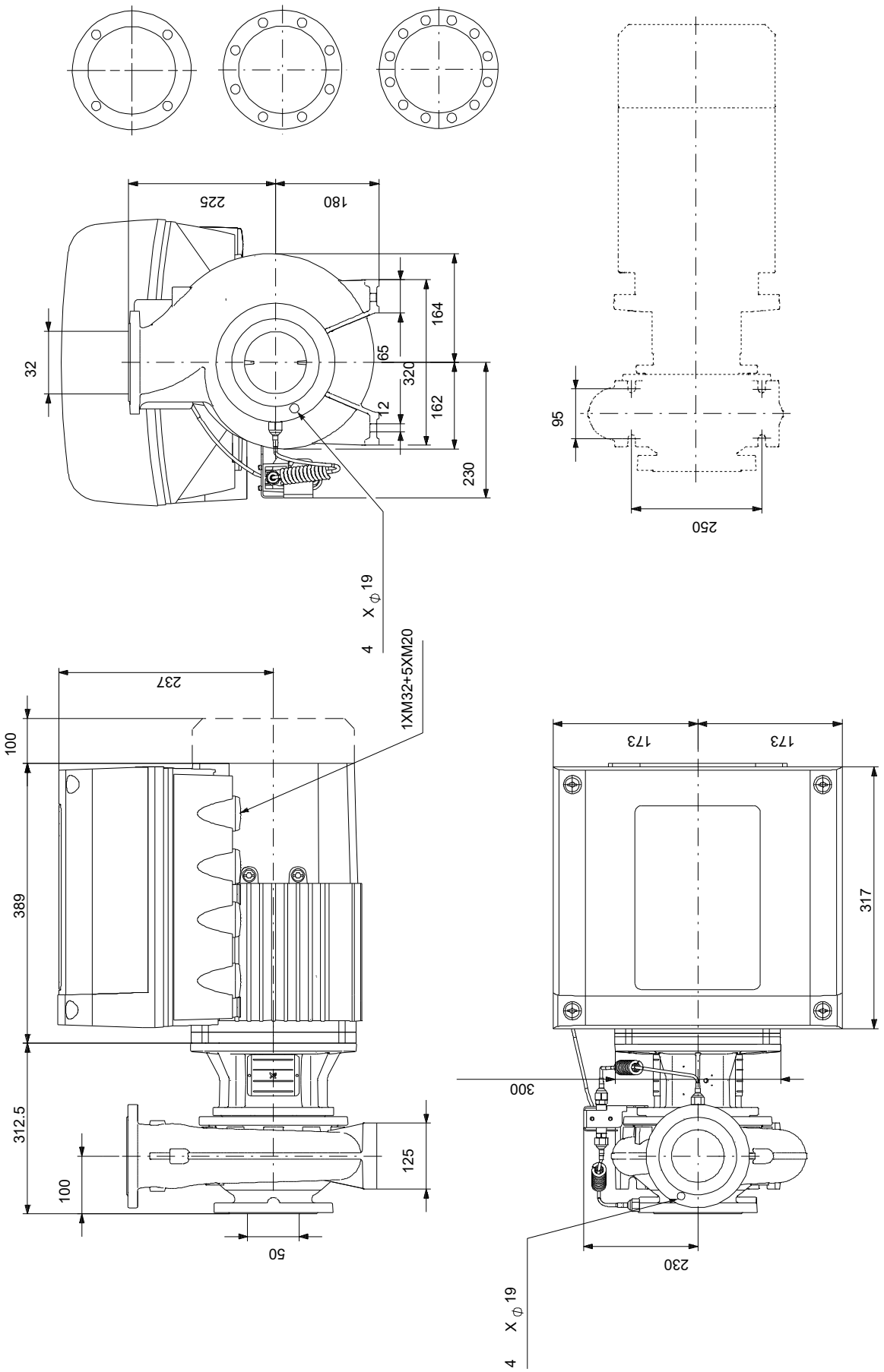

Note! All units are in [mm] unless others are stated.
Disclaimer: This simplified dimensional drawing does not show all details.

Spare parts NBE 32-250/219, Product No. 99534351
Produced After 2101 (production year and week number)

Pos	Omschrijving	Opmerking tekst	Classificatie Gegevens	Onderdeelnr.	Aantal	Eenheid
-	Bulk, Nut			92514630	1	pcs
67	Nut		Thread: M14		5	
-	Bulk, o-ring			92547618	1	pcs
72a	O-ring		Diameter: 253,6		5	
			Material type: EPDM			
			Thickness: 3,53			
-	Bulk, Plug vent			96620482	1	pcs
18	Plug				5	
-	Bulk, Shaft seal			99380916	1	pcs
105	Shaft seal				5	
-	Kit, capillary tubes			99582282	1	pcs
508	Tube				1	
509	Capillary tube.				1	
510	Mounting bush.				2	
-	Kit, coupling guard			96809945	1	pcs
7a	Pan head screw				4	
7	Coupling guard				2	
-	Kit, motor stool			98990894	1	pcs
1a	Motor stool				1	
7	Coupling guard				2	
18	Plug				1	
28	Hex head screw		Length (mm): 50 MM		4	
			Thread: M12			
36	Nut		Thread: M12		4	
36	Nut		Thread: M10		10	
76a	Rivet				2	
77a	Pan head screw				4	
-	Kit, nut			96939128	1	pcs
11	Parallel key		Dimension: 6X6X35		1	
- 36	Nut				1	
66a	Spring lock washer					1
66	Washer					1
67	Nut		Thread: M14			1
-	Kit, Pump housing no wear ring			99563367	1	pcs
- 6	Pump housing				1	
6	Pump housing					1
26	Staybolt		Length (mm): 35			10
			Thread: M10			
45	Wear ring					1
20	Pipe plug		Thread: R 3/8		2	
66a	Nut		Thread: M10		10	
-	Kit, sensor			99562726	1	pcs
	Cable tie				1	
	Housing				1	
	Clip				1	
	Fitting				2	
501	Sensor				1	
506	Pan washer head screw				2	
511	Cable				1	
-	Kit, stub shaft			96039353	1	pcs
9	Socket set screw		Length (mm): 10		2	
			Thread: M8			
11	Parallel key		Dimension: 6X6X35		1	
51	Pump shaft				1	
66a	Spring lock washer				1	
66	Washer				1	
67	Nut		Thread: M14		1	
-	Spare, bracket			99562727	1	pcs
505	Bracket				1	

Pos	Omschrijving	Opmerking tekst	Classificatie Gegevens	Onderdeelnr.	Aantal	Eenheid
+	Spare, O-ring			97757672	1	pcs
-	Spare, plug vent			98164277	1	pcs
18	Plug				1	
-	Spare, shaft seal			98434904	1	pcs
105	Shaft seal				1	
-	Spare, wear ring			99208825	1	pcs
45	Wear ring				1	
-	Motor				1	pcs
-	Kit, Ball bearing			98881521	1	
153	Ball bearing		Designation: 6206.2Z.C3.SYN			1
154	Ball bearing					1
156d	Seal ring					1
156c	Seal ring					1
157	O-ring		Diameter: 62 Material type: NBR Thickness: 3			1
158	Waved washer					1
-	Kit, Blanking plug			99052476	1	
252b	Blind plug					1
252b	Plug cpl.					5
-	Kit, cable gland			98736115	1	
293	Cable glands set					1
-	Kit, connector plugs			98403113	1	
266	Connector plug 10-pole					1
266	Connector plug 2-pole					1
266	Connector plug 8-pole					1
266	Connector plug 8-pole					1
266	Connector plug 8-pole					1
266	Connector plug 3-pole					1
266	Connector plug 3-pole					1
266	Connector plug 3-pole					1
-	Kit, control box			98878620	1	
251d	Pan head thread forming screw					4
251b	Control box					1
251a	Control box cpl.					1
252b	Blind plug					1
252b	Plug cpl.					5
266	Connector plug 10-pole					1
266	Connector plug 8-pole					1
266	Connector plug 8-pole					1
266	Connector plug 8-pole					1
266	Connector plug 3-pole					1
266	Connector plug 3-pole					1
266	Connector plug 3-pole					1
268a	Base					2
268	Pan head screw					2
273b	Battery					1
273a	Cross recess Pan head screw					4
273	Funct. Module cpl.					1
275a	Pin					1
277b	Spring					4
277a	Cross recess Pan head screw					1
277	Cover					1
286	Spacer					1
287	Cover					1
288b	Retaining ring					8
288a	Pan head thread forming screw					8
288	Wire clamp					4
289a	Pan head thread forming screw					1
289	Wire clamp					1
290	Control panel, cpl.					1
301	Jumper					1
-	Kit, Control box upper			98869871	1	

Pos	Omschrijving	Opmerking tekst	Classificatie Gegevens	Onderdeelnr.	Aantal	Eenheid
251b	Pan head thread forming screw				4	
251b	Control box				1	
-	Kit, Control panel			98939971	1	
290	Control panel, cpl.				1	
-	Kit, cover			98330622	1	
287	Cover				1	
-	Kit, end shield (NDE)			98869885	1	
150b	O-ring				1	
156c	Seal ring				1	
156.a	End shield NDE				1	
157	O-ring		Diameter: 62		1	
			Material type: NBR			
			Thickness: 3			
158	Waved washer				1	
206	Pan head thread forming screw				4	
206	Hex socket head cap screw				4	
207b	Nut				4	
-	Kit, fan			98869879	1	
152	Pan head thread forming screw				4	
156c	Seal ring				1	
156	Fan				1	
-	Kit, fan cover			99957566	1	
151	Fan cover				1	
152	Pan head thread forming screw				4	
-	Kit, flange (DE)			98869905	1	
	Glue				0	
150b	O-ring				1	
155a	Bearing cover				1	
156c	Seal ring				1	
156b	Flange				1	
185	Hex socket head cap screw				4	
201c	Drain plug				4	
208b	Nut				4	
208a	Gasket				3	
208	Hex socket head cap screw		Designation: DIN912		3	
			Length (mm): 40			
			Thread: M5			
-	Kit, Funct. module			98334777	1	
273a	Cross recess Pan head screw				5	
273	Funct. Module cpl.				1	
275a	Pin				1	
286	Spacer				1	
-	Kit, Isolation cover			98859523	1	
277b	Spring				4	
277a	Cross recess Pan head screw				1	
277	Cover				1	
-	Kit, Lower part cpl.			98859573	1	
178	Pan head thread forming screw				4	
251a	Control box cpl.				1	
275a	Pin				1	
277a	Cross recess Pan head screw				1	
277	Cover				1	
-	Kit, motor			99010794	1	
	Hex socket head cap screw				2	
	Terminal				6	
40	Parallel key				1	
66a	Washer				2	
99a	Retaining ring				1	
111	Ball bearing		Designation: 6206.2Z.C3.SYN		1	
118a	Hex socket head cap screw				4	
150b	O-ring				2	
150	Stator w/housing				1	
151	Fan cover				1	

Pos	Omschrijving	Opmerking tekst	Classificatie Gegevens	Onderdeelnr.	Aantal	Eenheid
152	Pan head thread forming screw				4	
153	Ball bearing				1	
155a	Bearing cover				1	
156d	Gasket				1	
156c	Seal ring				1	
156c	Seal ring				1	
156b	Flange				1	
156.a	End shield NDE				1	
156	Fan				1	
157	O-ring		Diameter: 62		1	
			Material type: NBR			
			Thickness: 3			
158	Waved washer				1	
172	Shaft w/rotor				1	
185	Hex socket head cap screw				4	
186	Drain plug				4	
187	Retaining ring				1	
203	Terminal plug				1	
208b	Nut				4	
208b	Nut				4	
208a	Gasket				3	
208	Hex socket head cap screw		Designation: DIN912		3	
			Length (mm): 40			
			Thread: M5			
289a	Pan head thread forming screw				2	
-	Kit, plug			99028677	1	
152	Pan head thread forming screw				2	
203	Terminal plug				1	
205	Gasket				1	
-	Kit, screws			99028725	1	
268a	Base				2	
268	Pan head screw				2	
288b	Retaining ring				8	
288a	Pan head thread forming screw				8	
288	Wire clamp				4	
289a	Pan head thread forming screw				1	
289	Wire clamp				1	
-	Kit, staybolts			98881543	1	
181	Pan head staybolt				4	
	Lifting device			99140040	2	
111	Ball bearing		Designation: 6206.2Z.C3.SYN	99078033	1	
111	Ball bearing		Designation: 6206.2Z.C3.SYN	97501070	1	
152	Pan head thread forming screw			99834207	2	
152	Pan head thread forming screw			99814578	2	
153	Ball bearing			98638919	1	
186	Drain plug			99980519	4	
251d	Pan head thread forming screw			98995460	4	
266	Connector plug 3-pole			99421265	1	
49	Impeller			98517831	1	pcs