# Inventflow: Grundfos A-partner

## Grundfos NBE 50-315/303 S2AF2ABQQE

Find the pump here:
https://inventflow.nl/en/pompenfilter/nbe/grundfos-nbe-50-315-303-s2af2abqqe

### Contact

info@inventflow.nl
+31 (0) 546 45 80 72

### Datasheet

| Qty. | Description |
|---|---|
| 1 | **NBE 50-315/303 S2AF2ABQQE** |

**Note! Product picture may differ from actual product**

Product No.: 99534759

Non-self priming, single-stage centrifugal
Flange standard: pump according to EN 1092-2.

The pump is for the pumping of thin, clean or slightly contaminated liquids without abrasive or long-fibred solids.

The impeller is hydraulically as well as dynamically balanced.

The pump has the following characteristics:
- flange dimensions according to EN 1092-2,

Pump housing: - Cast iron volute pump housing,
- stainless steel shaft

Impeller: and Cast iron impeller and bronze wear rings,
- unbalanced mechanical shaft seal according to EN 12756.

The pump is fitted with an IEC-flanged three-phase MGE motor with frequency converter and PI-controller integrated in the motor terminal box. No additional motor protection is required, as both motor and electronics are protected by integrated overload and temperature protection.

An external sensor can be connected if controlled pump operation based on for example flow, differential pressure or temperature is required.

A control panel enables setting of required setpoint as well as setting of pump to MIN or MAX operation or to STOP. The control panel has indicator lights for "Operation" and "Fault".

Communication with the pump is possible by means of Grundfos R100 Remote Control enabling further settings as well as reading out of a number of parameters such as "Actual value", "Speed", "Power input" and total "Power consumption".

The terminal box holds terminals for the connection of:
- pump start/stop (potential-free contact),
- external remote setpoint setting via analog signal, 0 - 5 V, 0 - 10 V, 0(4) - 20 mA,
- 5 V voltage supply for setpoint potentiometer, Imax = 5 mA,

| Qty. | Description |
|---|---|

- sensor, 0 - 5 V, 0 - 10 V, 0(4) - 20 mA,
- 24 V voltage supply for sensor, Imax = 40 mA,
- input for forced control to MIN or MAX (potential-free contact),
- potential-free fault signal relay with changeover contact,
- RS485 GENIbus.

Controls:

| | |
|---|---|
| Frequency converter: | Built-in |
| Pressure sensor: | Y |

Liquid:

| | |
|---|---|
| Pumped liquid: | Water |
| Liquid temperature range: | -25 .. 120 °C |
| Selected liquid temperature: | 20 °C |
| Density: | 998.2 kg/m³ |

Technical:

| | |
|---|---|
| Pump speed on which pump data are based: | 1450 rpm |
| Rated flow: | 42.2 m³/h |
| Rated head: | 27.1 m |
| Actual impeller diameter: | 303 mm |
| Nominal impeller diameter: | 315 |
| Shaft seal arrangement: | Single |
| Code for shaft seal: | BQQE |
| Curve tolerance: | ISO9906:2012 3B2 |
| Bearing design: | Standard |

Materials:

| | |
|---|---|
| Pump housing: | Cast iron<br>EN-GJL-250<br>ASTM class 35 |
| Wear ring: | Brass |
| Impeller: | Cast iron<br>EN-GJL-200<br>ASTM class 30 |
| Shaft: | Stainless steel<br>EN 1.4301<br>AISI 304 |
| Internal pump house coating: | CED |

Installation:

| | |
|---|---|
| Maximum ambient temperature: | 50 °C |
| Maximum operating pressure: | 16 bar |
| Pipe connection standard: | EN 1092-2 |
| Size of inlet connection: | DN 65 |
| Size of outlet connection: | DN 50 |
| Pressure rating for connection: | PN 16 |
| Bearing lubrication: | Grease |
| Pump housing with feet: | Yes |
| Support block: | N |

Electrical data:

| | |
|---|---|
| IE Efficiency class: | IE5 |
| Rated power - P2: | 5.5 kW |
| Mains frequency: | 50 Hz |
| Rated voltage: | 3 x 380-500 V |
| Rated current: | 10.5-8.40 A |
| Cos phi - power factor: | 0.92-0.88 |
| Rated speed: | 180-2200 rpm |
| Efficiency: | 91.9% |
| Motor efficiency at full load: | 91.9 % |
| Number of poles: | 4 |
| Enclosure class (IEC 34-5): | IP55 |

| Qty. | Description |
|---|---|
| | Insulation class (IEC 85): F<br>Motor No: 98971267<br>Type of pressure sensor: Differential<br><br>Others:<br>Minimum efficiency index, MEI ≥: 0.70<br>Net weight: 147 kg<br>Gross weight: 168 kg<br>Shipping volume: 0.509 m³<br>Country of origin: HU<br>Custom tariff no.: 84137051 |

# 99534759 NBE 50-315/303 S2AF2ABQQE 50 Hz

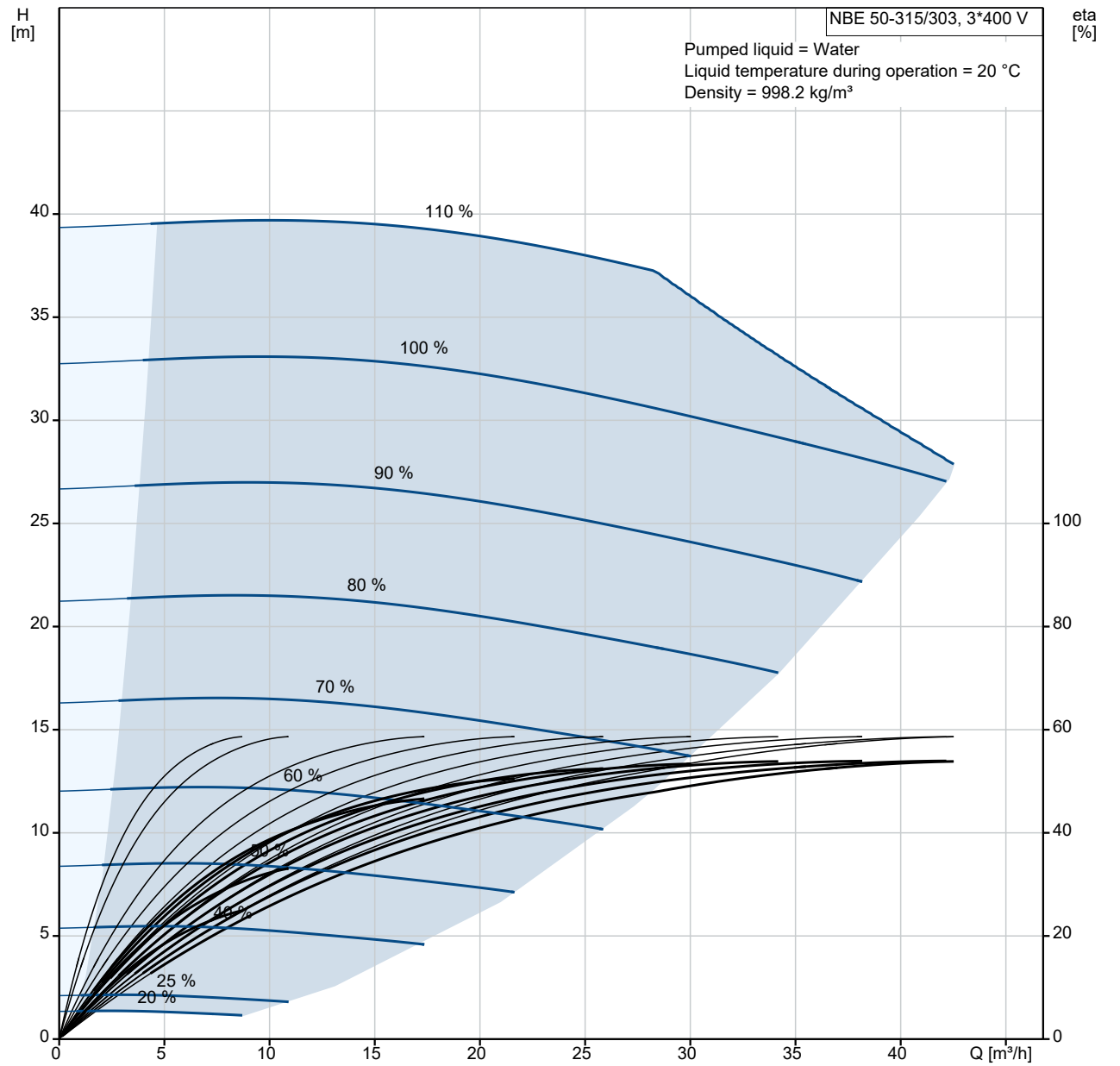


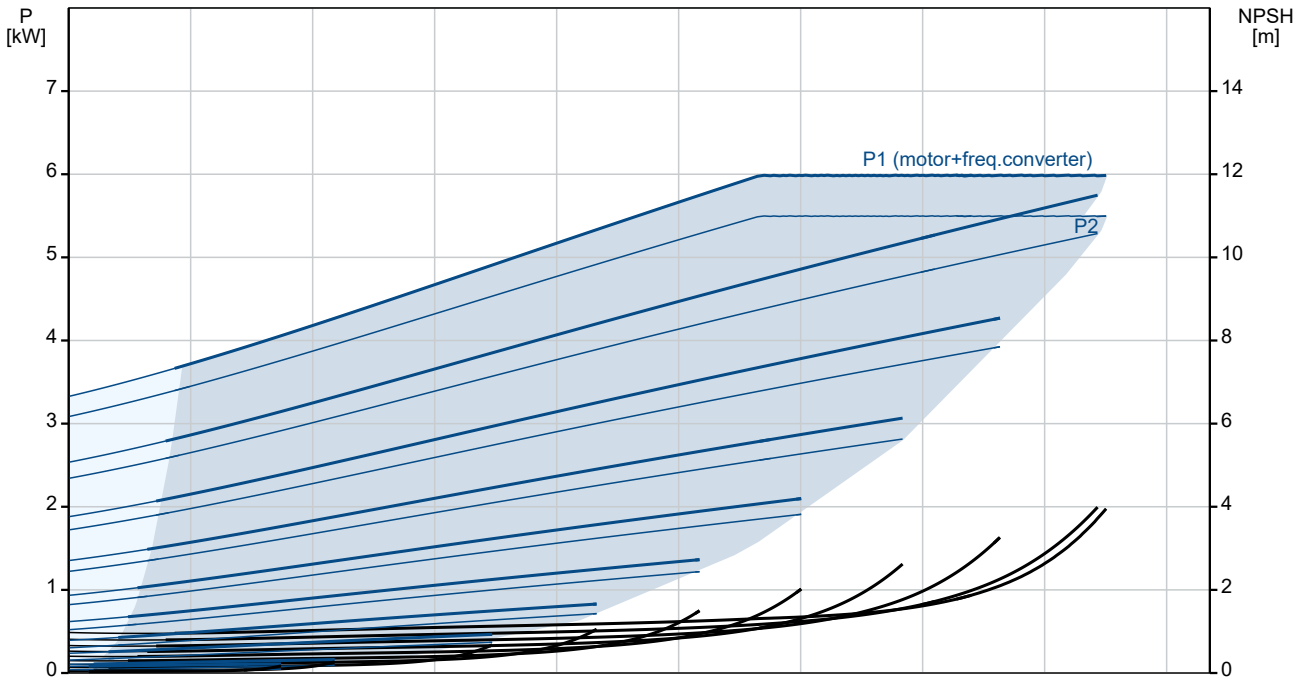

| Description | Value |
|---|---|
| **General information:** | |
| Product name: | NBE 50-315/303 S2AF2ABQQE |
| Product No: | 99534759 |
| EAN number: | 5713830670491 |
| **Technical:** | |
| Pump speed on which pump data are based: | 1450 rpm |
| Rated flow: | 42.2 m³/h |
| Rated head: | 27.1 m |
| Actual impeller diameter: | 303 mm |
| Nominal impeller diameter: | 315 |
| Shaft seal arrangement: | Single |
| Shaft diameter: | 32 mm |
| Code for shaft seal: | BQQE |
| Curve tolerance: | ISO9906:2012 3B2 |
| Pump version: | A |
| Bearing design: | Standard |
| **Materials:** | |
| Pump housing: | Cast iron |
| Pump housing: | EN-GJL-250 |
| Pump housing: | ASTM class 35 |
| Wear ring: | Brass |
| Impeller: | Cast iron |
| Impeller: | EN-GJL-200 |
| Impeller: | ASTM class 30 |
| Shaft: | Stainless steel |
| Shaft: | EN 1.4301 |
| Shaft: | AISI 304 |
| Internal pump house coating: | CED |
| Material code: | A |
| Code for rubber: | E |
| **Installation:** | |
| Maximum ambient temperature: | 50 °C |
| Maximum operating pressure: | 16 bar |
| Pipe connection standard: | EN 1092-2 |
| Size of inlet connection: | DN 65 |
| Size of outlet connection: | DN 50 |
| Pressure rating for connection: | PN 16 |
| Bearing lubrication: | Grease |
| Pump housing with feet: | Yes |
| Support block: | N |
| Connect code: | F2 |
| **Liquid:** | |
| Pumped liquid: | Water |
| Liquid temperature range: | -25 .. 120 °C |
| Selected liquid temperature: | 20 °C |
| Density: | 998.2 kg/m³ |
| **Electrical data:** | |
| IE Efficiency class: | IE5 |
| Rated power - P2: | 5.5 kW |
| Mains frequency: | 50 Hz |
| Rated voltage: | 3 x 380-500 V |
| Rated current: | 10.5-8.40 A |
| Cos phi - power factor: | 0.92-0.88 |
| Rated speed: | 180-2200 rpm |
| Efficiency: | 91.9% |
| Motor efficiency at full load: | 91.9 % |
| Number of poles: | 4 |
| Enclosure class (IEC 34-5): | IP55 |
| Insulation class (IEC 85): | F |
| Motor protec: | ELEC |
| Motor No: | 98971267 |
| Mount. design. acc. IEC 34-7: | IM V1/B5 |

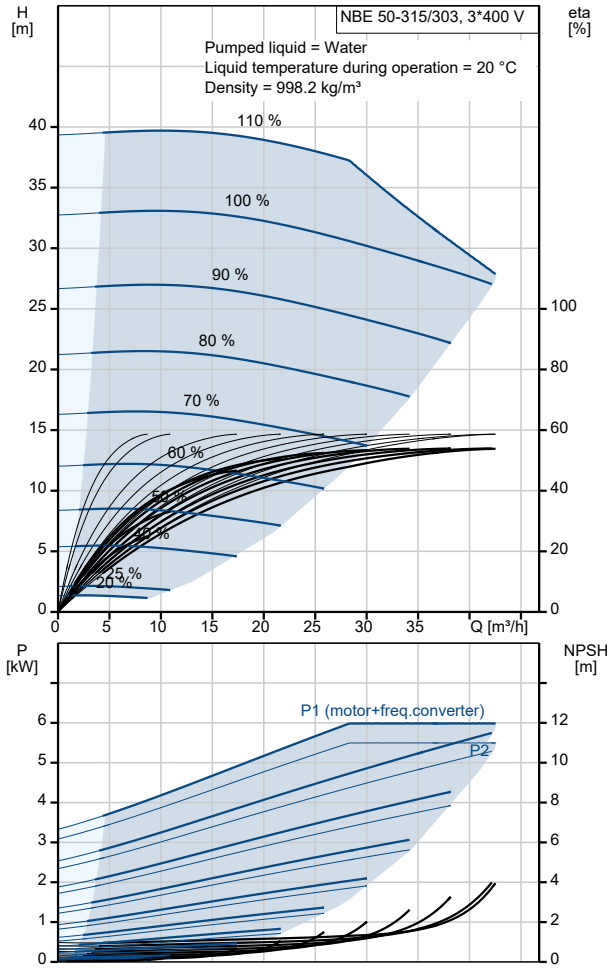

| Description | Value |
|---|---|
| Type of pressure sensor: | Differential |
| **Controls:** | |
| Control panel: | HMI300 - Advanced |
| Function Module: | FM300 - Advanced |
| Frequency converter: | Built-in |
| Pressure sensor: | Y |
| **Others:** | |
| Minimum efficiency index, MEI ≥: | 0.70 |
| Net weight: | 147 kg |
| Gross weight: | 168 kg |
| Shipping volume: | 0.509 $m^3$ |
| Country of origin: | HU |
| Custom tariff no.: | 84137051 |

# 99534759 NBE 50-315/303 S2AF2ABQQE 50 Hz

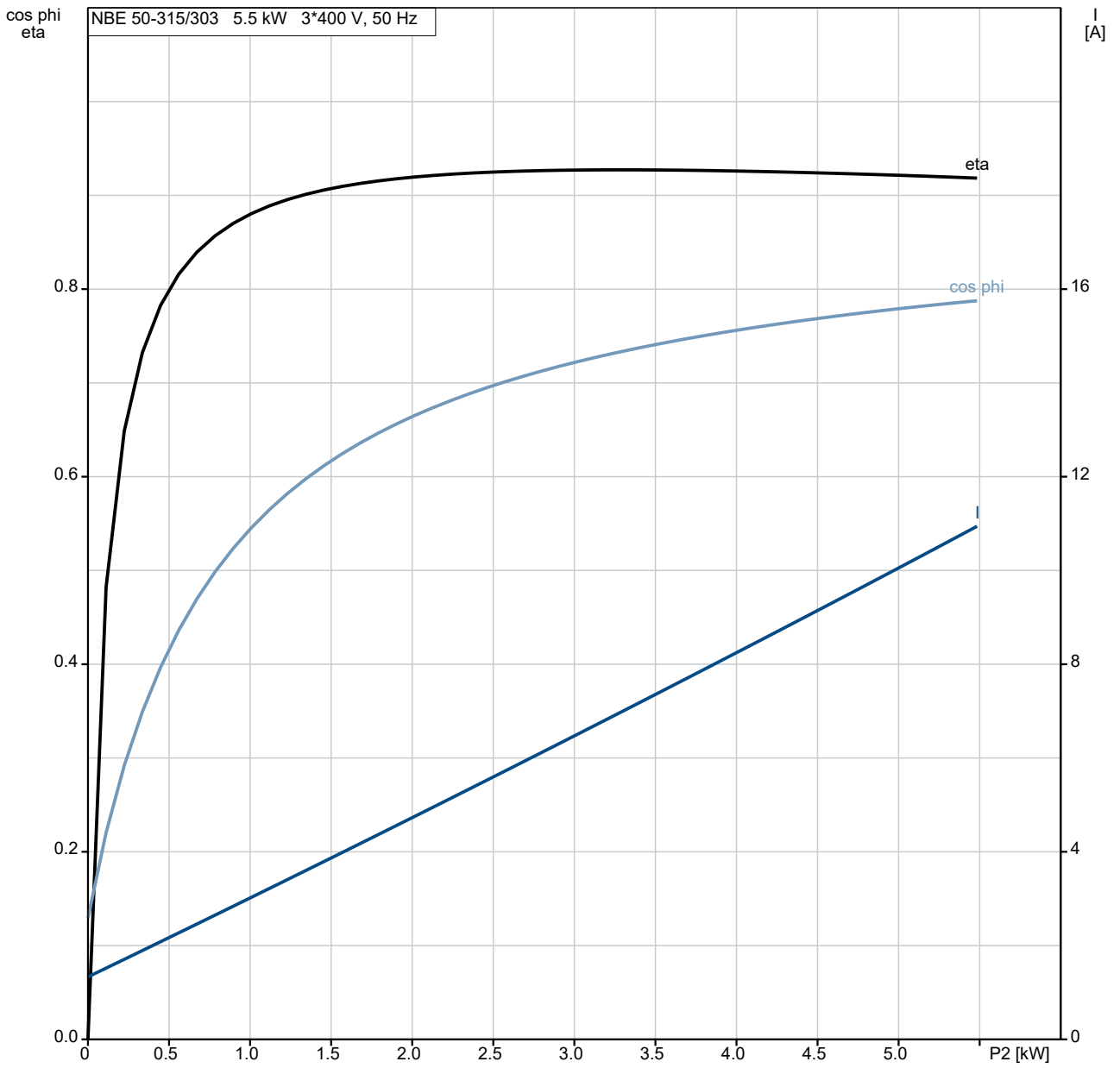


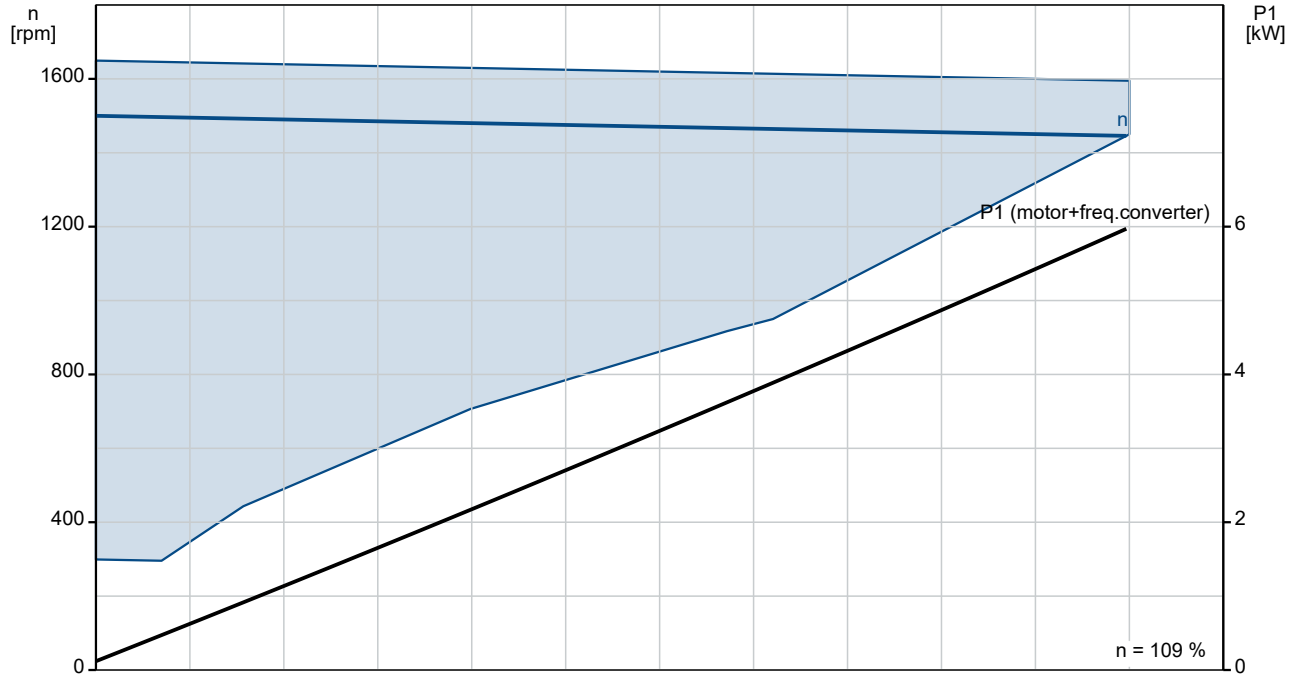

# 99534759 NBE 50-315/303 S2AF2ABQQE 50 Hz

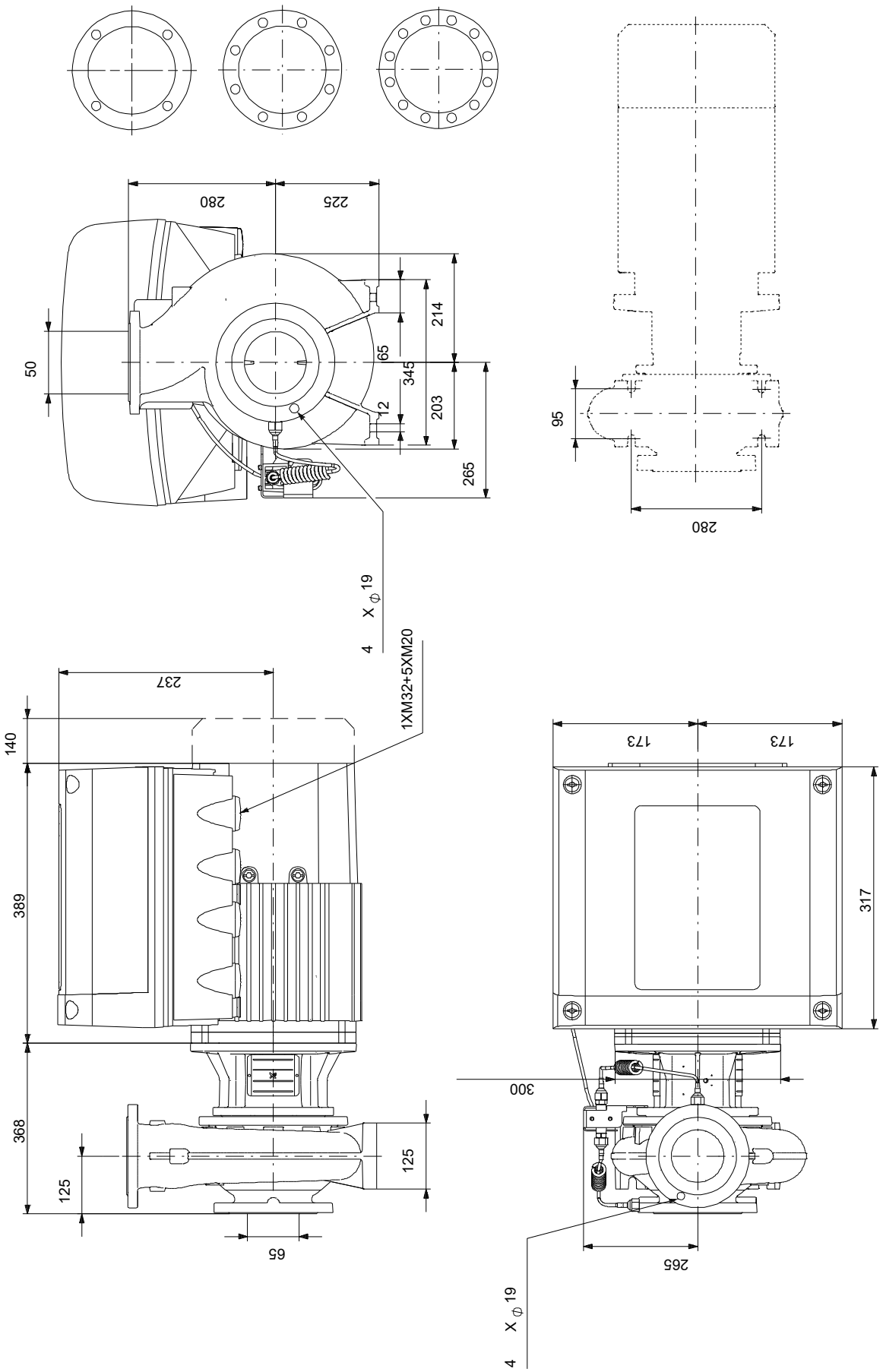


Note! All units are in [mm] unless others are stated.
Disclaimer: This simplified dimensional drawing does not show all details.

# Spare parts NBE 50-315/303, Product No. 99534759
# Produced After 2101 (production year and week number)

| Pos | Omschrijving | Opmerking tekst | Classificatie Gegevens | Onderdeelnr. | Aantal | Eenheid |
|---|---|---|---|---|---|---|
| - | Bulk, Nut | | | 92514631 | 1 | pcs |
| 67 | Nut | | Thread: M18 | | 5 | |
| - | Bulk, o-ring | | | 92547632 | 1 | pcs |
| 72a | O-ring | | Diameter: 329,79 | | 5 | |
| | | | Material type: EPDM | | | |
| | | | Thickness: 3,53 | | | |
| - | Bulk, Plug vent | | | 96620482 | 1 | pcs |
| 18 | Plug | | | | 5 | |
| - | Bulk, Shaft seal | | | 92514302 | 1 | pcs |
| 105 | Shaft seal | | | | 5 | |
| - | Kit, capillary tubes | | | 99582282 | 1 | pcs |
| 508 | Tube | | | | 1 | |
| 509 | Capillary tube. | | | | 1 | |
| 510 | Mounting bush. | | | | 2 | |
| - | Kit, coupling guard | | | 96591145 | 1 | pcs |
| 7a | Pan head screw | | | | 4 | |
| 7 | Coupling guard | | | | 2 | |
| - | Kit, cover | | | 98990970 | 1 | pcs |
| 18 | Plug | | | | 1 | |
| 36 | Nut | | Thread: M12 | | 14 | |
| 36 | Nut | | Thread: M10 | | 8 | |
| 77 | Cover | | | | 1 | |
| - | Kit, motor stool | | | 95131784 | 1 | pcs |
| 1a | Motor stool | | | | 1 | |
| 7 | Coupling guard | | | | 2 | |
| 28 | Hex head screw | | Length (mm): 50 MM | | 4 | |
| | | | Thread: M12 | | | |
| 36 | Nut | | Thread: M12 | | 4 | |
| 36 | Nut | | Thread: M10 | | 8 | |
| 76a | Rivet | | | | 2 | |
| 77a | Pan head screw | | | | 4 | |
| - | Kit, nut | | | 96939130 | 1 | pcs |
| 11 | Parallel key | | | | 1 | |
| - 36 | Nut | | | | 1 | |
| 66a | Spring lock washer | | | | | 1 |
| 66 | Washer | | | | | 1 |
| 67 | Nut | | Thread: M18 | | | 1 |
| - | Kit, Pump housing no wear ring | | | 99563342 | 1 | pcs |
| - 6 | Pump housing | | | | 1 | |
| 6 | Pump housing | | | | | 1 |
| 26 | Staybolt | | Length (mm): 40 | | | 14 |
| | | | Thread: M12 | | | |
| 45 | Wear ring | | | | | 1 |
| 20 | Plug | | | | 2 | |
| 36 | Nut | | Thread: M12 | | 14 | |
| - | Kit, sensor | | | 99562724 | 1 | pcs |
| | Cable tie | | | | 1 | |
| | Housing | | | | 1 | |
| | Clip | | | | 1 | |
| | Fitting | | | | 2 | |
| 501 | Sensor | | | | 1 | |
| 506 | Pan washer head screw | | | | 2 | |
| 511 | Cable | | | | 1 | |
| - | Kit, stub shaft | | | 96039358 | 1 | pcs |
| 9 | Socket set screw | | Length (mm): 10 | | 2 | |
| | | | Thread: M8 | | | |
| 11 | Parallel key | | | | 1 | |
| 51 | Pump shaft | | | | 1 | |
| 66a | Spring lock washer | | | | 1 | |

| Pos | Omschrijving | Opmerking tekst | Classificatie Gegevens | Onderdeelnr. | Aantal | Eenheid |
|---|---|---|---|---|---|---|
| 66 | Washer | | | | 1 | |
| 67 | Nut | | Thread: M18 | | 1 | |
| - | Spare, bracket | | | 99562727 | 1 | pcs |
| 505 | Bracket | | | | 1 | |
| + | Spare, O-ring | | | 97757675 | 1 | pcs |
| - | Spare, plug vent | | | 98164277 | 1 | pcs |
| 18 | Plug | | | | 1 | |
| - | Spare, shaft seal | | | 98434906 | 1 | pcs |
| 105 | Shaft seal | | | | 1 | |
| - | Spare, spacer for shaft seal | | | 96591277 | 1 | pcs |
| 105b | Spacer | | | | 1 | |
| - | Spare, wear ring | | | 99208818 | 1 | pcs |
| 45 | Wear ring | | | | 1 | |
| - | Motor | | | | 1 | pcs |
| - | Kit, Ball bearing | | | 98881521 | 1 | |
| 153 | Ball bearing | | Designation: 6206.2Z.C3.SYN | | | 1 |
| 154 | Ball bearing | | | | | 1 |
| 156d | Seal ring | | | | | 1 |
| 156c | Seal ring | | | | | 1 |
| 157 | O-ring | | Diameter: 62 | | | 1 |
| | | | Material type: NBR | | | |
| | | | Thickness: 3 | | | |
| 158 | Waved washer | | | | | 1 |
| - | Kit, Blanking plug | | | 99052476 | 1 | |
| 252b | Blind plug | | | | | 1 |
| 252b | Plug cpl. | | | | | 5 |
| - | Kit, cable gland | | | 98736115 | 1 | |
| 293 | Cable glands set | | | | | 1 |
| - | Kit, connector plugs | | | 98403113 | 1 | |
| 266 | Connector plug 10-pole | | | | | 1 |
| 266 | Connector plug 2-pole | | | | | 1 |
| 266 | Connector plug 8-pole | | | | | 1 |
| 266 | Connector plug 8-pole | | | | | 1 |
| 266 | Connector plug 8-pole | | | | | 1 |
| 266 | Connector plug 3-pole | | | | | 1 |
| 266 | Connector plug 3-pole | | | | | 1 |
| 266 | Connector plug 3-pole | | | | | 1 |
| - | Kit, control box | | | 98878620 | 1 | |
| 251d | Pan head thread forming screw | | | | | 4 |
| 251b | Control box | | | | | 1 |
| 251a | Control box cpl. | | | | | 1 |
| 252b | Blind plug | | | | | 1 |
| 252b | Plug cpl. | | | | | 5 |
| 266 | Connector plug 10-pole | | | | | 1 |
| 266 | Connector plug 8-pole | | | | | 1 |
| 266 | Connector plug 8-pole | | | | | 1 |
| 266 | Connector plug 8-pole | | | | | 1 |
| 266 | Connector plug 3-pole | | | | | 1 |
| 266 | Connector plug 3-pole | | | | | 1 |
| 266 | Connector plug 3-pole | | | | | 1 |
| 268a | Base | | | | | 2 |
| 268 | Pan head screw | | | | | 2 |
| 273b | Battery | | | | | 1 |
| 273a | Cross recess Pan head screw | | | | | 4 |
| 273 | Funct. Module cpl. | | | | | 1 |
| 275a | Pin | | | | | 1 |
| 277b | Spring | | | | | 4 |
| 277a | Cross recess Pan head screw | | | | | 1 |
| 277 | Cover | | | | | 1 |
| 286 | Spacer | | | | | 1 |
| 287 | Cover | | | | | 1 |
| 288b | Retaining ring | | | | | 8 |
| 288a | Pan head thread forming screw | | | | | 8 |

| Pos | Omschrijving | Opmerking tekst | Classificatie Gegevens | Onderdeelnr. | Aantal | Eenheid |
|---|---|---|---|---|---|---|
| 288 | Wire clamp | | | | 4 | |
| 289a | Pan head thread forming screw | | | | 1 | |
| 289 | Wire clamp | | | | 1 | |
| 290 | Control panel, cpl. | | | | 1 | |
| 301 | Jumper | | | | 1 | |
| - | Kit, Control box upper | | | 98869871 | 1 | |
| 251b | Pan head thread forming screw | | | | 4 | |
| 251b | Control box | | | | 1 | |
| - | Kit, Control panel | | | 98939971 | 1 | |
| 290 | Control panel, cpl. | | | | 1 | |
| - | Kit, cover | | | 98330622 | 1 | |
| 287 | Cover | | | | 1 | |
| - | Kit, end shield (NDE) | | | 98869885 | 1 | |
| 150b | O-ring | | | | 1 | |
| 156c | Seal ring | | | | 1 | |
| 156.a | End shield NDE | | | | 1 | |
| 157 | O-ring | | Diameter: 62 | | 1 | |
| | | | Material type: NBR | | | |
| | | | Thickness: 3 | | | |
| 158 | Waved washer | | | | 1 | |
| 206 | Pan head thread forming screw | | | | 4 | |
| 206 | Hex socket head cap screw | | | | 4 | |
| 207b | Nut | | | | 4 | |
| - | Kit, fan | | | 98869881 | 1 | |
| 152 | Pan head thread forming screw | | | | 4 | |
| 156c | Seal ring | | | | 1 | |
| 156 | Fan | | | | 1 | |
| - | Kit, fan cover | | | 99957566 | 1 | |
| 151 | Fan cover | | | | 1 | |
| 152 | Pan head thread forming screw | | | | 4 | |
| - | Kit, flange (DE) | | | 98869905 | 1 | |
| | Glue | | | | 0 | |
| 150b | O-ring | | | | 1 | |
| 155a | Bearing cover | | | | 1 | |
| 156c | Seal ring | | | | 1 | |
| 156b | Flange | | | | 1 | |
| 185 | Hex socket head cap screw | | | | 4 | |
| 201c | Drain plug | | | | 4 | |
| 208b | Nut | | | | 4 | |
| 208a | Gasket | | | | 3 | |
| 208 | Hex socket head cap screw | | Designation: DIN912 | | 3 | |
| | | | Length (mm): 40 | | | |
| | | | Thread: M5 | | | |
| - | Kit, Funct. module | | | 98334777 | 1 | |
| 273a | Cross recess Pan head screw | | | | 5 | |
| 273 | Funct. Module cpl. | | | | 1 | |
| 275a | Pin | | | | 1 | |
| 286 | Spacer | | | | 1 | |
| - | Kit, Isolation cover | | | 98859523 | 1 | |
| 277b | Spring | | | | 4 | |
| 277a | Cross recess Pan head screw | | | | 1 | |
| 277 | Cover | | | | 1 | |
| - | Kit, Lower part cpl. | | | 98859573 | 1 | |
| 178 | Pan head thread forming screw | | | | 4 | |
| 251a | Control box cpl. | | | | 1 | |
| 275a | Pin | | | | 1 | |
| 277a | Cross recess Pan head screw | | | | 1 | |
| 277 | Cover | | | | 1 | |
| - | Kit, motor | | | 99010769 | 1 | |
| | Hex socket head cap screw | | | | 2 | |
| | Terminal | | | | 6 | |
| | Washer | | | | 2 | |

| Pos | Omschrijving | Opmerking tekst | Classificatie Gegevens | Onderdeelnr. | Aantal | Eenheid |
|---|---|---|---|---|---|---|
| 111 | Ball bearing | | Designation: 6206.2Z.C3.SYN | | 1 | |
| 150b | O-ring | | | | 2 | |
| 150 | Stator w/housing | | | | 1 | |
| 151 | Fan cover | | | | 1 | |
| 152 | Pan head thread forming screw | | | | 4 | |
| 152 | Pan head thread forming screw | | | | 2 | |
| 153 | Ball bearing | | | | 1 | |
| 155a | Bearing cover | | | | 1 | |
| 156d | Seal ring | | | | 1 | |
| 156c | Seal ring | | | | 1 | |
| 156b | Flange | | | | 1 | |
| 156 | Fan | | | | 1 | |
| 157 | O-ring | | Diameter: 62 | | 1 | |
| | | | Material type: NBR | | | |
| | | | Thickness: 3 | | | |
| 158 | Waved washer | | | | 1 | |
| 172a | Parallel key | | | | 1 | |
| 172 | Shaft w/rotor | | | | 1 | |
| 185 | Hex socket head cap screw | | | | 4 | |
| 187 | Retaining ring | | | | 1 | |
| 188 | Retaining ring | | | | 1 | |
| 201c | Drain plug | | | | 4 | |
| 203 | Terminal plug | | | | 1 | |
| 205 | Gasket | | | | 1 | |
| 206 | Hex socket head cap screw | | | | 4 | |
| 207b | Nut | | | | 4 | |
| 208b | Nut | | | | 4 | |
| 208a | Gasket | | | | 3 | |
| 208 | Hex socket head cap screw | | Designation: DIN912 | | 3 | |
| | | | Length (mm): 40 | | | |
| | | | Thread: M5 | | | |
| - | Kit, plug | | | 99028677 | 1 | |
| 152 | Pan head thread forming screw | | | | 2 | |
| 203 | Terminal plug | | | | 1 | |
| 205 | Gasket | | | | 1 | |
| - | Kit, screws | | | 99028725 | 1 | |
| 268a | Base | | | | 2 | |
| 268 | Pan head screw | | | | 2 | |
| 288b | Retaining ring | | | | 8 | |
| 288a | Pan head thread forming screw | | | | 8 | |
| 288 | Wire clamp | | | | 4 | |
| 289a | Pan head thread forming screw | | | | 1 | |
| 289 | Wire clamp | | | | 1 | |
| - | Kit, staybolts | | | 98881543 | 1 | |
| 181 | Pan head staybolt | | | | 4 | |
| | Lifting device | | | 99140040 | 2 | |
| 111 | Ball bearing | | Designation: 6206.2Z.C3.SYN | 99078033 | 1 | |
| 111 | Ball bearing | | Designation: 6206.2Z.C3.SYN | 97501070 | 1 | |
| 152 | Pan head thread forming screw | | | 99834207 | 2 | |
| 152 | Pan head thread forming screw | | | 99814578 | 2 | |
| 153 | Ball bearing | | | 98638919 | 1 | |
| 156 | Fan | | | 96591802 | 1 | |
| 186 | Drain plug | | | 99980519 | 4 | |
| 251d | Pan head thread forming screw | | | 98995460 | 4 | |
| 266 | Connector plug 3-pole | | | 99421265 | 1 | |
| 49 | Impeller | | | 99012786 | 1 | pcs |